Interface "graph" between object and PlcPgm

interface graphnamer
SpeedSp - Sp0
SpeedAct - Sp0
SpeedAct - SpOrp

Ap | $PlcFc.RefSpeed → StoAn | $PlcMain.RefSpeed

Dp | $PlcFc.ReadyRemote → StoDp | $PlcMain.ReadyRemote

Page Scrobject
Protocol: Communication profile, Comm. profile,

Class-ABB_ACS800_1Fc-Code			
W	Proview		
19-MAR-2010 10:39		JE	1(5)

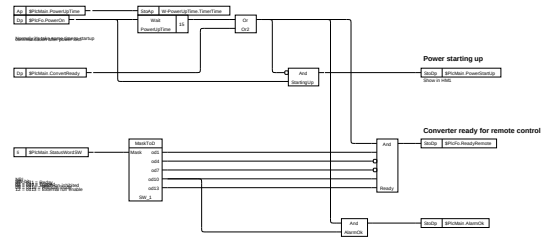

Page Scrobject
Protocol: Communication profile, Comm. profile,

Class-ABB_ACS800_1Fc-Code			
W	Proview		
19-MAR-2010 10:39		JE	2

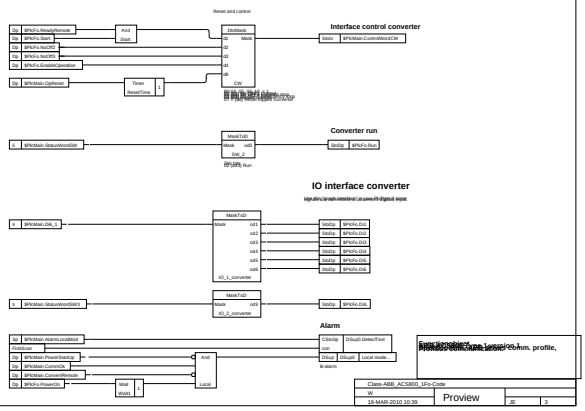

Page Scrobject
Protocol: Communication profile, Comm. profile,

Class-ABB_ACS800_1Fc-Code			
W	Proview		
19-MAR-2010 10:39		JE	3

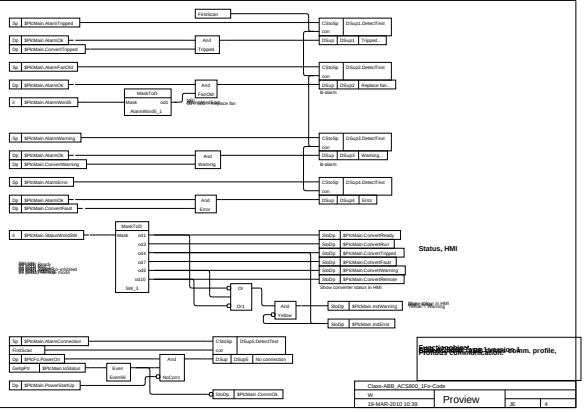

Page Scrobject
Protocol: Communication profile, Comm. profile,

Class-ABB_ACS800_1Fc-Code			
W	Proview		
19-MAR-2010 10:39		JE	4

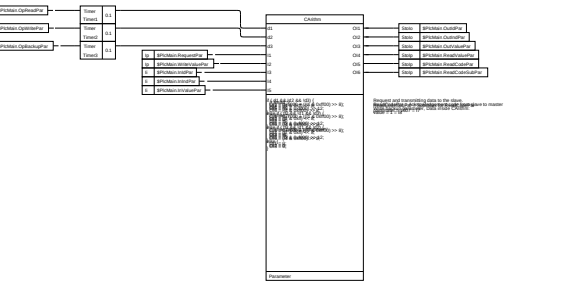

NB!
The attribute below must always placed last in this PlcPgm.

StoDp $PlcMain.OpReset
RestDp $PlcMain.OpWritePar
StoDp $PlcMain.OpResPar
RestDp $PlcMain.OpBackupPar

Page Scrobject
Protocol: Communication profile, Comm. profile,

Class-ABB_ACS800_1Fc-Code			
W	Proview		
19-MAR-2010 10:39		JE	5