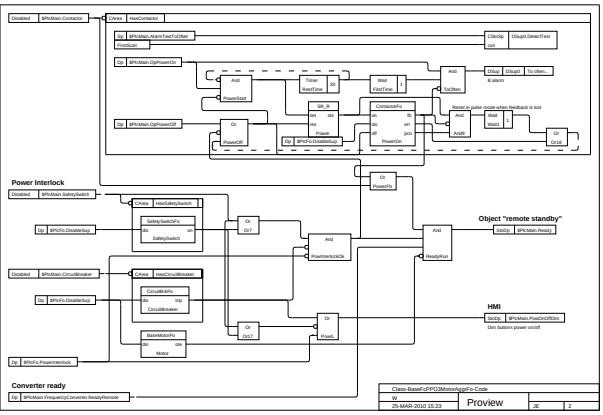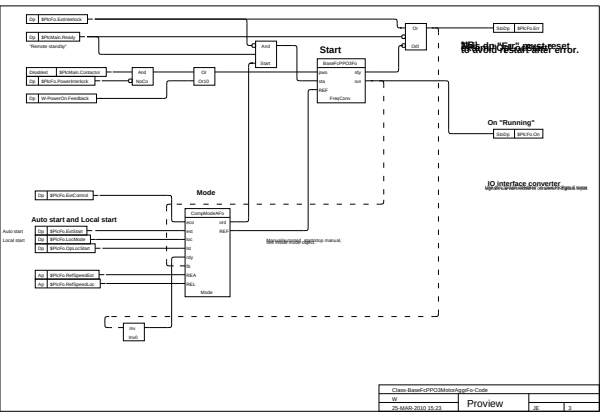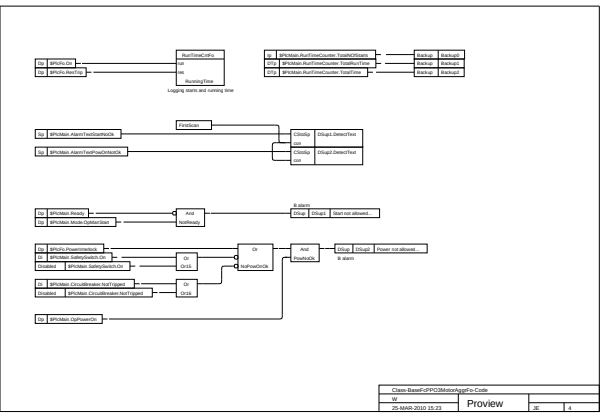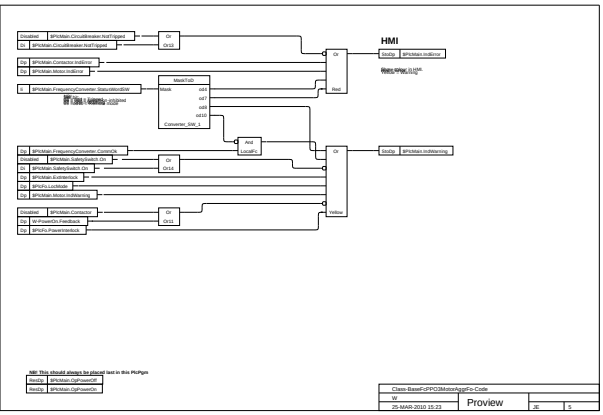Interface "graph" between object and PlcPgm